Cambridge Assessment International Education

Cambridge International AS & A Level

PHYSICS **9702/13**

Paper 1 Multiple Choice **May/June 2024**

1 hour 15 minutes

You must answer on the multiple choice answer sheet.

8319070239

You will need: Multiple choice answer sheet
Soft clean eraser
Soft pencil (type B or HB is recommended)

INSTRUCTIONS

- There are **forty** questions on this paper. Answer **all** questions.
- For each question there are four possible answers **A**, **B**, **C** and **D**. Choose the **one** you consider correct and record your choice in soft pencil on the multiple choice answer sheet.
- Follow the instructions on the multiple choice answer sheet.
- Write in soft pencil.
- Write your name, centre number and candidate number on the multiple choice answer sheet in the spaces provided unless this has been done for you.
- Do **not** use correction fluid.
- Do **not** write on any bar codes.
- You may use a calculator.

INFORMATION

- The total mark for this paper is 40.
- Each correct answer will score one mark.
- Any rough working should be done on this question paper.

This document has **20** pages. Any blank pages are indicated.

© UCLES 2024

Data

acceleration of free fall	$g = 9.81\,\text{m s}^{-2}$
speed of light in free space	$c = 3.00 \times 10^{8}\,\text{m s}^{-1}$
elementary charge	$e = 1.60 \times 10^{-19}\,\text{C}$
unified atomic mass unit	$1\,\text{u} = 1.66 \times 10^{-27}\,\text{kg}$
rest mass of proton	$m_\text{p} = 1.67 \times 10^{-27}\,\text{kg}$
rest mass of electron	$m_\text{e} = 9.11 \times 10^{-31}\,\text{kg}$
Avogadro constant	$N_\text{A} = 6.02 \times 10^{23}\,\text{mol}^{-1}$
molar gas constant	$R = 8.31\,\text{J K}^{-1}\,\text{mol}^{-1}$
Boltzmann constant	$k = 1.38 \times 10^{-23}\,\text{J K}^{-1}$
gravitational constant	$G = 6.67 \times 10^{-11}\,\text{N m}^2\,\text{kg}^{-2}$
permittivity of free space	$\varepsilon_0 = 8.85 \times 10^{-12}\,\text{F m}^{-1}$ $\left(\frac{1}{4\pi\varepsilon_0} = 8.99 \times 10^{9}\,\text{m F}^{-1}\right)$
Planck constant	$h = 6.63 \times 10^{-34}\,\text{J s}$
Stefan–Boltzmann constant	$\sigma = 5.67 \times 10^{-8}\,\text{W m}^{-2}\,\text{K}^{-4}$

Formulae

uniformly accelerated motion	$s = ut + \frac{1}{2}at^2$ $v^2 = u^2 + 2as$
hydrostatic pressure	$\Delta p = \rho g \Delta h$
upthrust	$F = \rho g V$
Doppler effect for sound waves	$f_\text{o} = \frac{f_\text{s} v}{v \pm v_\text{s}}$
electric current	$I = Anvq$
resistors in series	$R = R_1 + R_2 + \ldots$
resistors in parallel	$\frac{1}{R} = \frac{1}{R_1} + \frac{1}{R_2} + \ldots$

© UCLES 2024

1 What is equal to 0.000005 J?

A 5 mJ **B** 5 MJ **C** 5 μJ **D** 5 nJ

2 The measurement of a physical quantity may be subject to random errors and to systematic errors.

Which statement is correct?

A A systematic error **cannot** be reduced by adjusting the apparatus.

B A systematic error results in a different reading each time the measurement is taken.

C Random errors are always caused by the person taking the measurement.

D Random errors can be reduced by taking the average of several measurements.

3 The Young modulus of the material of a wire is to be found. The Young modulus E is given by the equation shown.

$$E = \frac{4FL}{\pi d^2 x}$$

The wire is extended by a known force and the following measurements are made.

Which measurement has the largest effect on the uncertainty in the value of the calculated Young modulus?

	measurement	symbol	value
A	length of wire before force applied	L	2.043 ± 0.002 m
B	diameter of wire	d	0.54 ± 0.02 mm
C	force applied	F	19.62 ± 0.01 N
D	extension of wire with force applied	x	5.2 ± 0.2 mm

4 Two physical quantities combined together as a product can produce a scalar quantity or a vector quantity.

Which product of two quantities produces a scalar quantity?

A (force) × (displacement of an object in the direction of the force)

B (mass) × (acceleration of the mass)

C (pressure) × (area on which the pressure acts)

D (velocity) × (time for which an object has that velocity)

5 The diagram shows a velocity–time graph for an object moving in a straight line.

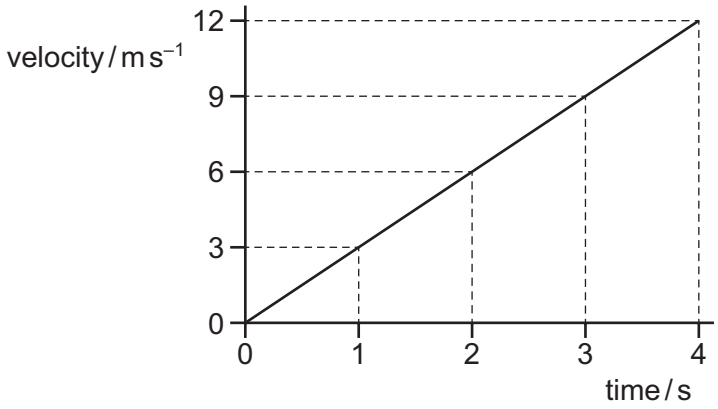

What is the displacement during the last 2 seconds of the motion?

A 6 m **B** 12 m **C** 18 m **D** 24 m

6 A block is moving along a horizontal frictionless surface. A constant force F and a constant resistive force of 5.0 N act on the block as it is moving in the direction of the force F, as shown.

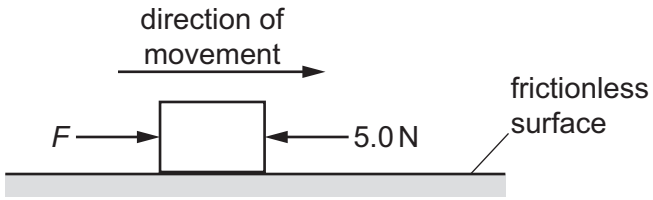

The graph shows the variation with time of the momentum of the block.

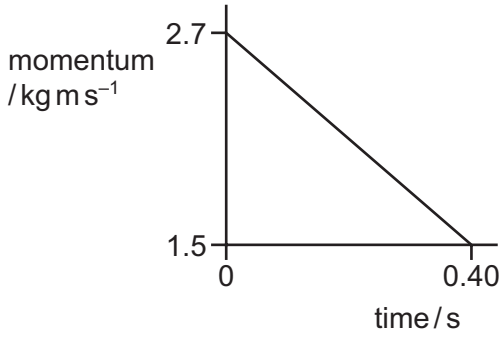

What is the magnitude of force F?

A 2.0 N **B** 3.0 N **C** 5.0 N **D** 8.0 N

© UCLES 2024

7 Newton's third law describes two forces that are equal in magnitude and form a pair.

Which description of the two forces in such a pair is **not** correct?

A They act in opposite directions.

B They act on different objects.

C They are the same type of force.

D They cause an object to be in equilibrium.

8 The graph shows the variation with time of the speed of a raindrop falling vertically through air.

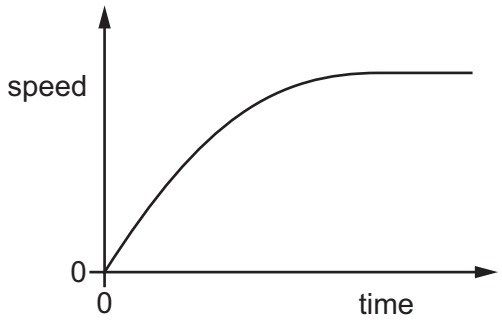

Which statement is correct?

A The acceleration decreases to produce a steady speed.

B The acceleration increases as the speed increases.

C The air resistance decreases as the speed increases.

D The resultant force increases as the speed increases.

9 Which statement about a perfectly elastic collision between two objects is correct?

A Total kinetic energy is conserved and the relative speed of approach equals the relative speed of separation.

B Total kinetic energy is conserved but the relative speed of approach does **not** equal the relative speed of separation.

C Total kinetic energy is **not** conserved and the relative speed of approach does **not** equal the relative speed of separation.

D Total kinetic energy is **not** conserved but the relative speed of approach does equal the relative speed of separation.

© UCLES 2024

10 The diagram shows the view from above of a sprinkler system used to water a garden.

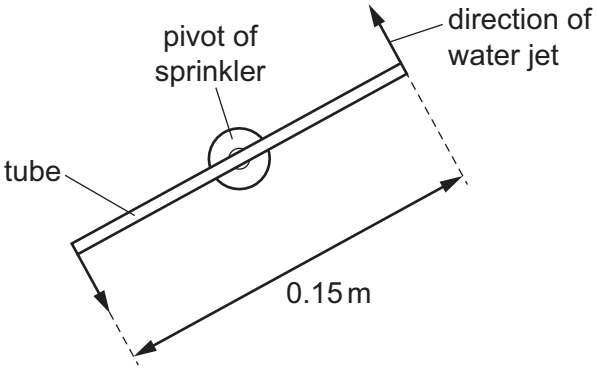

The sprinkler consists of a tube of length 0.15 m. The tube is pivoted in the middle and spins in a horizontal plane as it lets out jets of water from each end. The two water jets are in opposite directions to each other. Each water jet exerts a horizontal force of 3.0 N on the tube at right angles to the tube.

What is the magnitude of the torque on the tube from the water jets?

A 0 N m **B** 0.23 N m **C** 0.45 N m **D** 0.90 N m

11 An object is held in equilibrium by three forces. The forces all act in the same plane. The diagram shows two of the forces that act on the object.

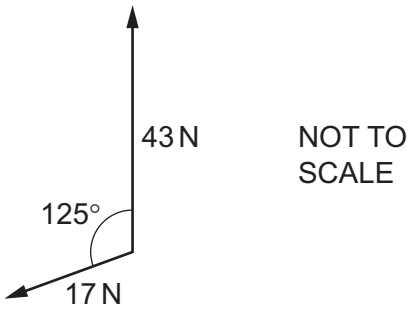

The third force is missing from the diagram.

What is the third force?

A



B

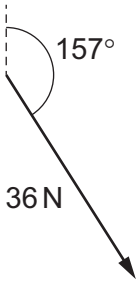

C

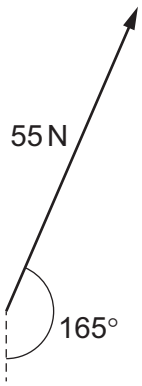

D



© UCLES 2024

12 The total number of forces acting on an object is two. The object is in equilibrium.

Which statements about the forces are correct?

1 The two forces must have equal magnitudes.

2 The two forces must act in the same direction.

3 The two forces must act through the same point.

A 1 and 2 only **B** 1 and 3 only **C** 2 and 3 only **D** 1, 2 and 3

13 The diagram shows the arrangement of atoms in a particular crystal.

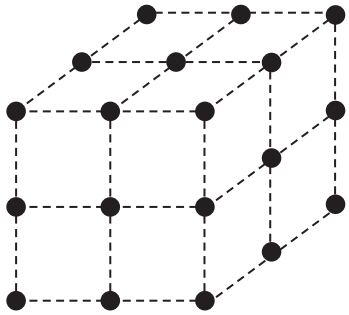

Each atom is at the corner of a cube.

The mass of each atom is 3.5×10^{-25} kg. The density of the crystal is 9.2×10^{3} kg m^{-3}.

What is the shortest distance between the centres of two adjacent atoms?

A 3.8×10^{-29} m

B 6.2×10^{-15} m

C 3.4×10^{-10} m

D 3.0×10^{-9} m

14 Four measuring cylinders are filled with the same liquid to the heights shown.

At which position is the pressure the greatest?

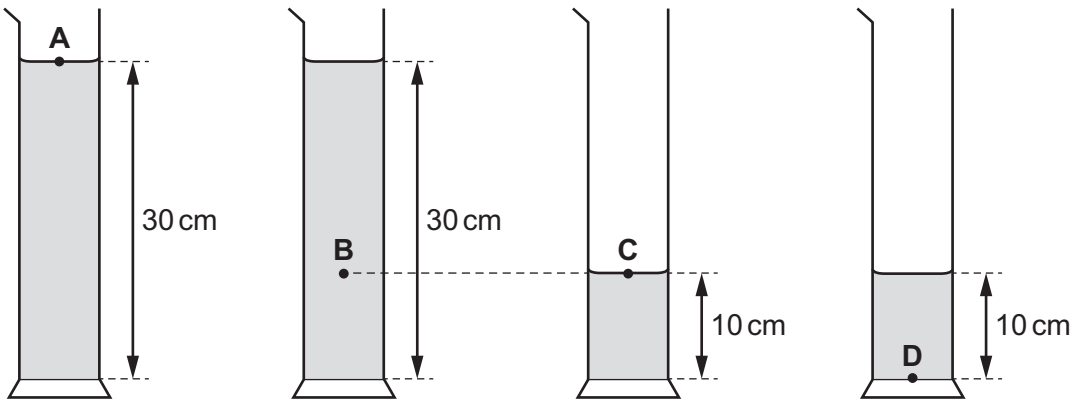

15 In many filament lamps, as much as 92 J of energy is emitted as thermal energy for every 8 J of energy emitted as light.

What is the efficiency of a filament lamp, as the percentage of electrical energy converted to light energy?

A 8% **B** 9% **C** 91% **D** 92%

16 What is a unit of power?

A JC^{-1} **B** Jm^{-1} **C** JN^{-1} **D** Js^{-1}

17 An object is in a uniform gravitational field. The graph shows how the change in gravitational potential energy ΔE_P of the object varies with the vertical distance x moved by the object from a fixed point.

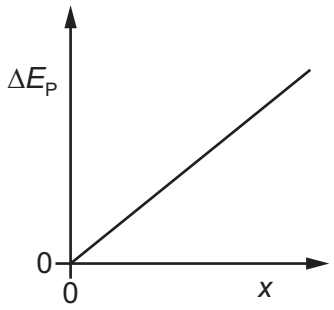

Which graph shows how the gravitational force F acting on the object varies with distance x?

A

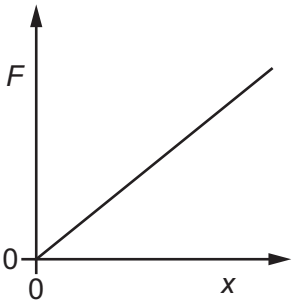

B

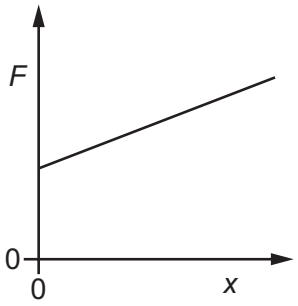

C

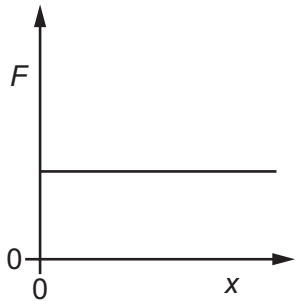

D

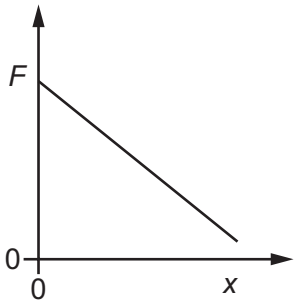

18 A block of mass 2.0 kg is released from rest on a slope. It travels 7.0 m down the slope and falls a vertical distance of 3.0 m. The block experiences a frictional force parallel to the slope of 5.0 N.

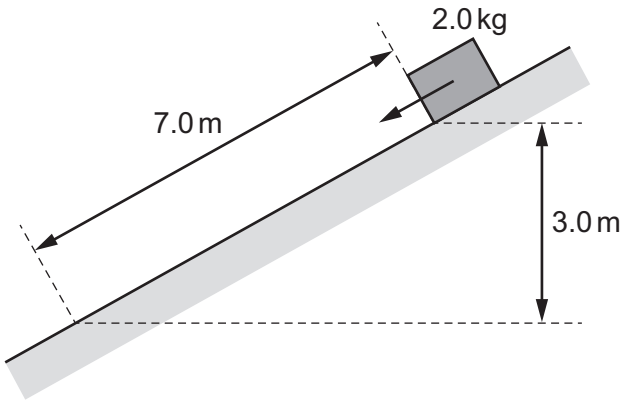

What is the speed of the block after falling this distance?

A $4.9\,m\,s^{-1}$ **B** $6.6\,m\,s^{-1}$ **C** $8.6\,m\,s^{-1}$ **D** $10\,m\,s^{-1}$

19 Two wires, one made of brass and the other of steel, are stretched in an experiment. Both wires obey Hooke's law during this experiment.

The Young modulus for brass is less than the Young modulus for steel.

Which graph shows how the stress varies with strain for both wires in this experiment?

A

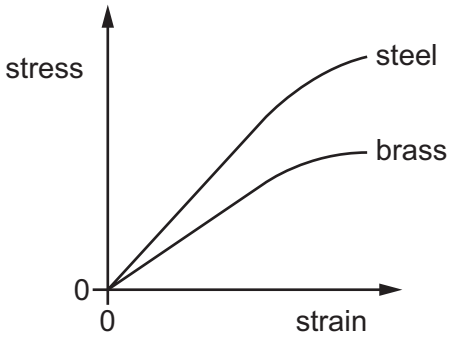

B

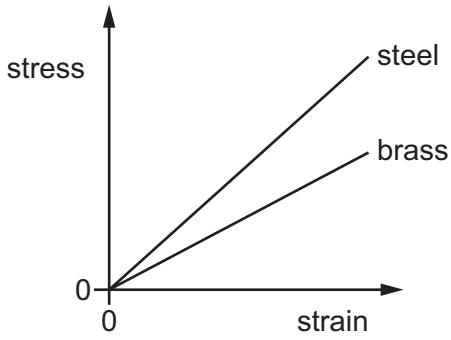

C

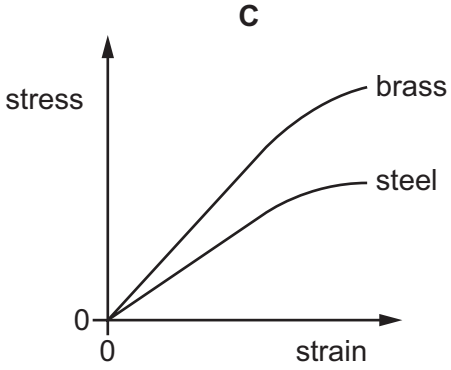

D

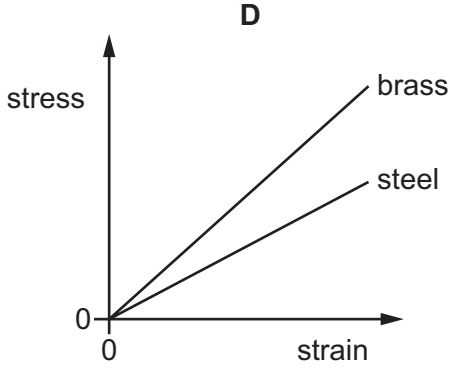

20 A sample of material is stretched by a tensile force to a point beyond its elastic limit. The tensile force is then reduced to zero. The force–extension graph is shown.

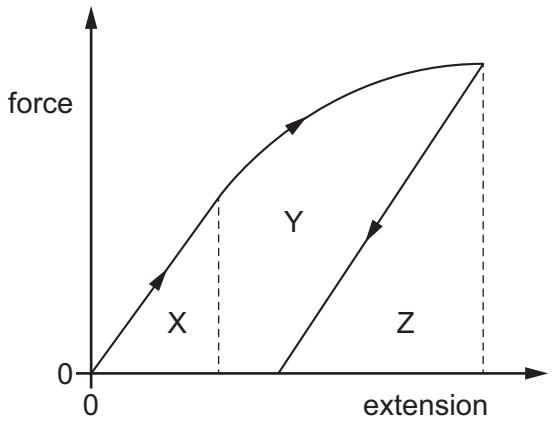

Which area represents the net work done on the sample?

A X **B** X + Y **C** Y + Z **D** Z

21 A wire is fixed at one end and is extended by a force F_1 acting on the other end. This causes the wire to have an elastic potential energy of 0.15 J.

The force applied to the wire is now changed to a force F_2. This causes the wire to have a new elastic potential energy of 0.60 J.

The wire obeys Hooke's law.

What is the relationship between F_1 and F_2?

A $F_1 = 2F_2$ **B** $F_1 = 4F_2$ **C** $2F_1 = F_2$ **D** $4F_1 = F_2$

22 The diagram shows a representation of a wave on the screen of an oscilloscope.

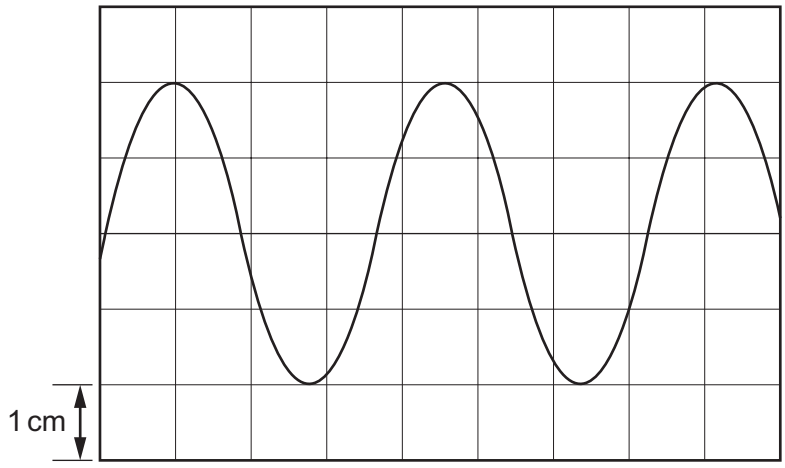

The *y*-gain is set to 3.5 mV cm^{-1}.

What is the amplitude of the wave?

A 0.57 mV **B** 3.5 mV **C** 7.0 mV **D** 14 mV

© UCLES 2024

23 A transverse progressive wave on a string has a wavelength of 12 cm and an amplitude of 1.5 cm. The speed of the wave on the string is 48 cm s^{-1}.

What is the distance travelled by a point on the string in a time of 2.0 s?

A 12 cm **B** 24 cm **C** 48 cm **D** 96 cm

24 An ambulance siren emits a sound with a single frequency *f*.

The ambulance travels towards, passes close to, and then travels away from a stationary observer.

Which statement describes the frequency of the sound detected by the observer as the ambulance **passes** the observer?

A equal to *f* and decreasing

B equal to *f* and increasing

C greater than *f* and constant

D less than *f* and constant

25 An electromagnetic wave has a wavelength of 138 pm in a vacuum.

To which region of the electromagnetic spectrum does this wave belong?

A radio wave

B microwave

C visible light

D X-ray

26 A student investigates the polarisation of microwaves. The microwaves from the transmitter are vertically polarised. A metal grille acts as a polarising filter when placed between the microwave transmitter and the receiver. The reading on the voltmeter is proportional to the intensity of microwaves transmitted through the grille.

When the transmission axis of the grille is vertical, the voltmeter reads 3.50 V.

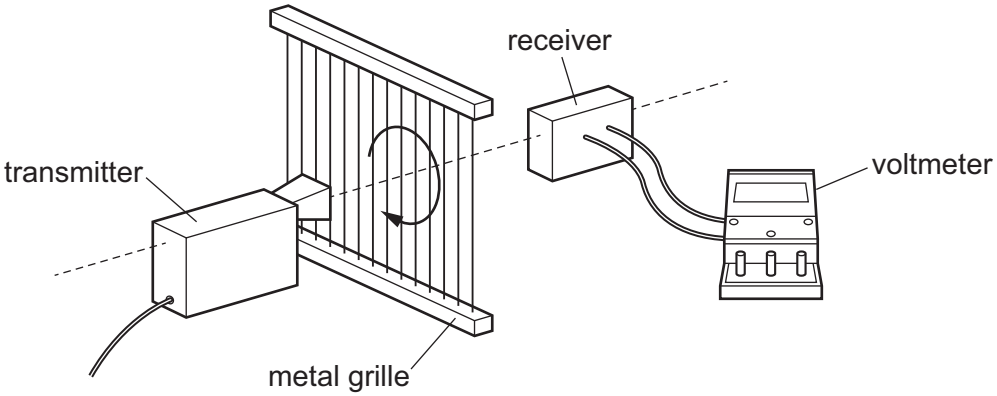

The grille is then rotated through an angle θ. The voltmeter now reads 2.20 V.

What is θ?

A 37.5° **B** 39.0° **C** 51.0° **D** 52.5°

27 Two waves superpose. A resultant wave pattern is formed.

Which statement about the two waves **must** be correct?

A They have the same amplitude.

B They are of the same type.

C They are transverse waves.

D They travel in opposite directions.

28 A water wave passes through a gap in a harbour wall and diffracts. The gap has a width of 8 m.

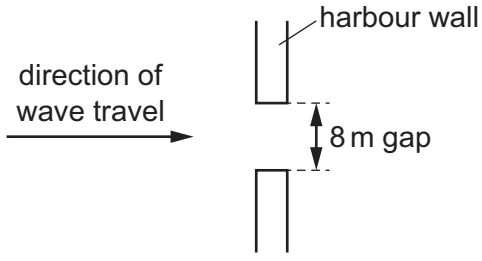

The wave travels directly towards the gap.

For which wavelength is the diffraction of the wave greatest?

A 1 m **B** 2 m **C** 4 m **D** 8 m

© UCLES 2024

29 Light of wavelength 5.50×10^{-7} m from a laser is incident normally on a diffraction grating.

The diffracted light is incident on a semicircular screen, as shown in the view from above.

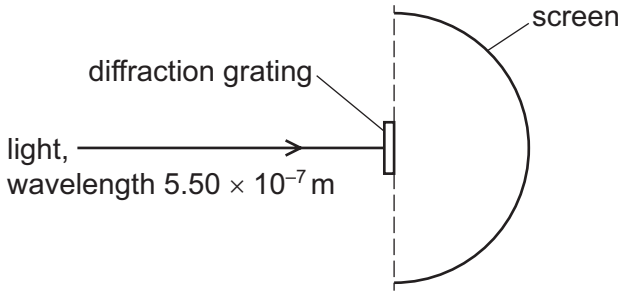

view from above

A total of 9 bright dots are formed on the screen.

The grating is at the centre of the semicircle. The lines of the grating are vertical. The separation between adjacent lines in the grating is d.

What is a possible value of d?

A 2.25×10^{-6} m **B** 2.80×10^{-6} m **C** 4.40×10^{-6} m **D** 4.95×10^{-6} m

30 Which quantity is given by the product of charge and electric potential difference?

A current

B energy transferred

C power dissipated

D resistance

31 The current in a filament lamp is increased.

Which statement about the lamp is correct?

A The brightness of the lamp decreases.

B The potential difference across the filament decreases.

C The resistance of the filament decreases.

D The temperature of the filament increases.

32 A student builds the circuit shown. All the lamps are identical.

Which lamp dissipates the most power?

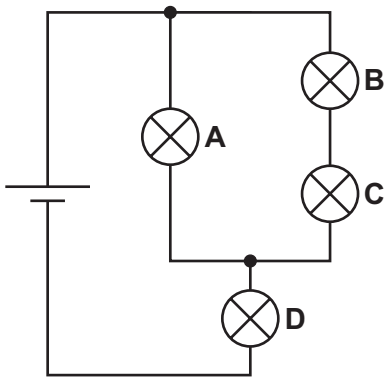

33 The resistance of a metal cube is measured by placing it between two parallel plates, as shown.

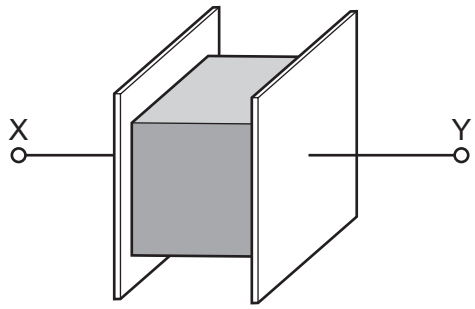

The cube has volume V and is made of a material with resistivity ρ. The connections to the cube have negligible resistance.

Which expression gives the electrical resistance of the metal cube between X and Y?

A $\rho V^{\frac{1}{3}}$ **B** $\rho V^{\frac{2}{3}}$ **C** $\frac{\rho}{V^{\frac{1}{3}}}$ **D** $\frac{\rho}{V^{\frac{2}{3}}}$

34 A circuit needs to be completed by connecting two resistors between points X and Y, as shown.

The resistors can be connected in series or in parallel with each other.

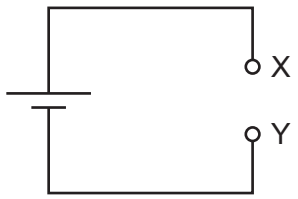

Which combination of resistors produces the least resistance between X and Y?

	resistances of resistors / Ω	type of combination
A	20 and 40	parallel
B	40 and 100	parallel
C	20 and 40	series
D	40 and 100	series

35 The diagram shows a circuit that includes a cell with internal resistance.

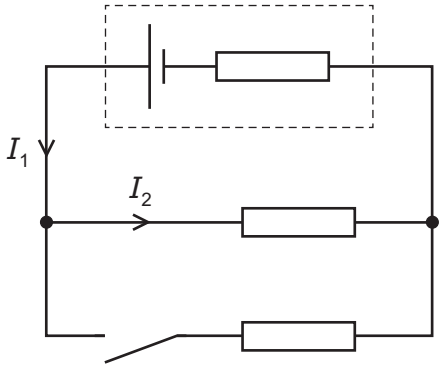

The switch is initially open.

Which row describes the effects on currents I_1 and I_2 of closing the switch?

	I_1	I_2
A	decreases	decreases
B	decreases	stays the same
C	increases	decreases
D	increases	stays the same

© UCLES 2024

36 The diagram shows a circuit consisting of a cell and three resistors R_1, R_2 and R_3.

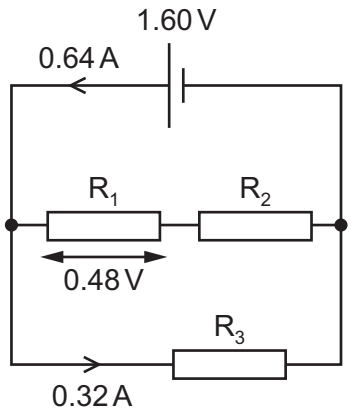

The cell has electromotive force (e.m.f.) 1.60 V and negligible internal resistance. The current in the cell is 0.64 A.

The potential difference across R_1 is 0.48 V.

The current in R_3 is 0.32 A.

What is the resistance of R_2?

A 1.5 Ω **B** 2.5 Ω **C** 3.5 Ω **D** 5.0 Ω

© UCLES 2024

37 The diagram shows a potentiometer circuit used to compare the electromotive forces (e.m.f.), E_1 and E_2, of two cells.

XY is a uniform resistance wire. The fixed resistor has resistance R.

A sliding contact is moved along the wire XY. When the sliding contact is at position P, the galvanometer reads zero.

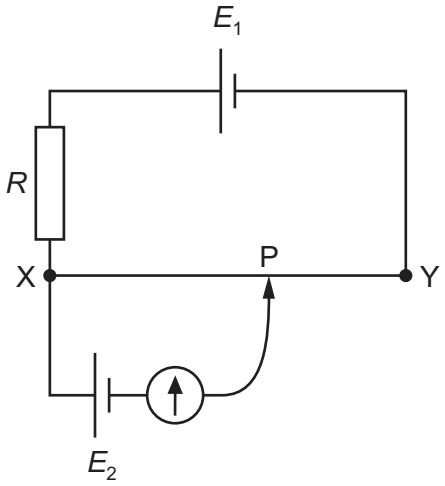

The circuit is changed so that the galvanometer reads zero when the sliding contact is at a new position to the left of P.

Which change could have been made to the circuit?

A The wire XY was replaced with one of lower resistance.

B E_2 was increased.

C E_1 was decreased.

D R was decreased.

© UCLES 2024

38 Nucleus P has 144 neutrons and 93 protons. Nucleus P is unstable and undergoes α-decay to form nucleus Q. Nucleus Q then undergoes β^- decay to form nucleus R.

Nucleus P is represented by point P on the graph.

Which point on the graph represents nucleus R?

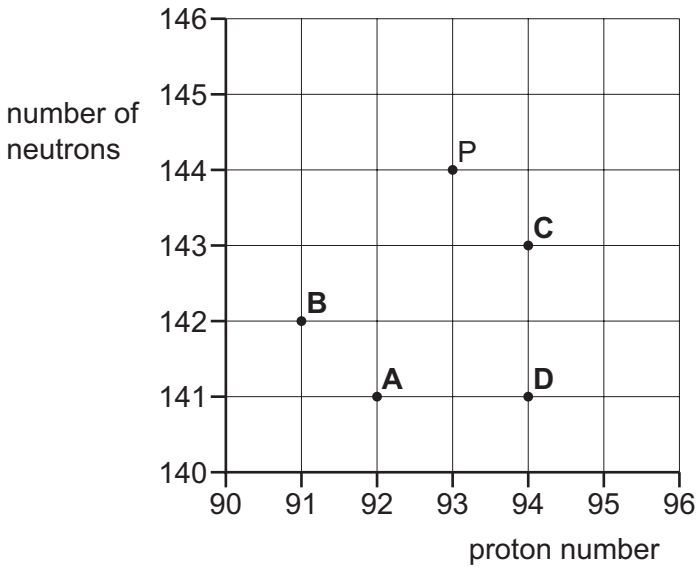

39 The diagrams show the quark composition of four different hadrons. One of the hadrons is a Σ^+ particle. It has a charge of $+e$, where e is the elementary charge.

Which hadron could be the Σ^+ particle?

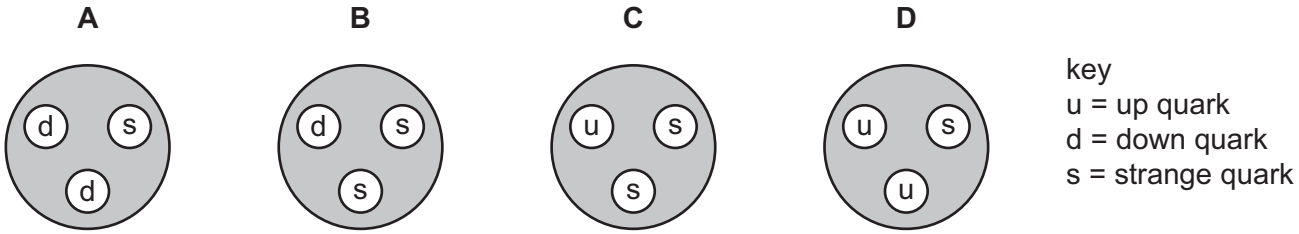

40 Which type of particle is comprised of the most quarks?

A antiquark

B baryon

C lepton

D meson

© UCLES 2024

BLANK PAGE

BLANK PAGE

Permission to reproduce items where third-party owned material protected by copyright is included has been sought and cleared where possible. Every reasonable effort has been made by the publisher (UCLES) to trace copyright holders, but if any items requiring clearance have unwittingly been included, the publisher will be pleased to make amends at the earliest possible opportunity.

To avoid the issue of disclosure of answer-related information to candidates, all copyright acknowledgements are reproduced online in the Cambridge Assessment International Education Copyright Acknowledgements Booklet. This is produced for each series of examinations and is freely available to download at www.cambridgeinternational.org after the live examination series.

Cambridge Assessment International Education is part of Cambridge Assessment. Cambridge Assessment is the brand name of the University of Cambridge Local Examinations Syndicate (UCLES), which is a department of the University of Cambridge.

© UCLES 2024